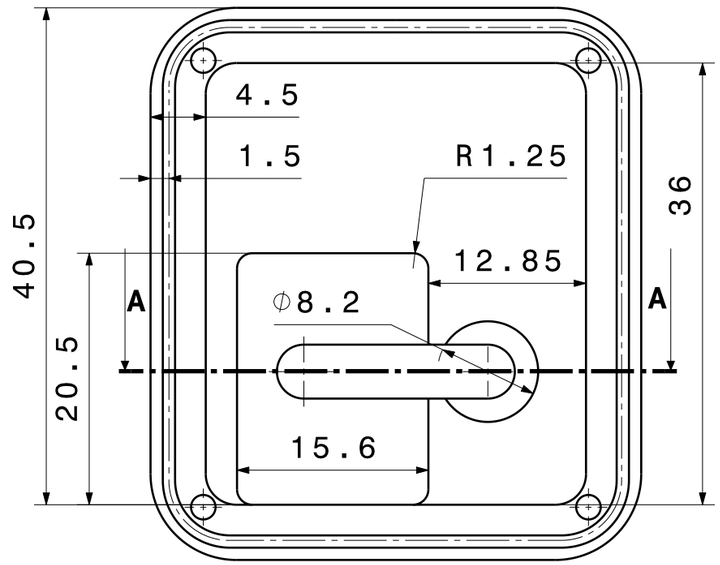

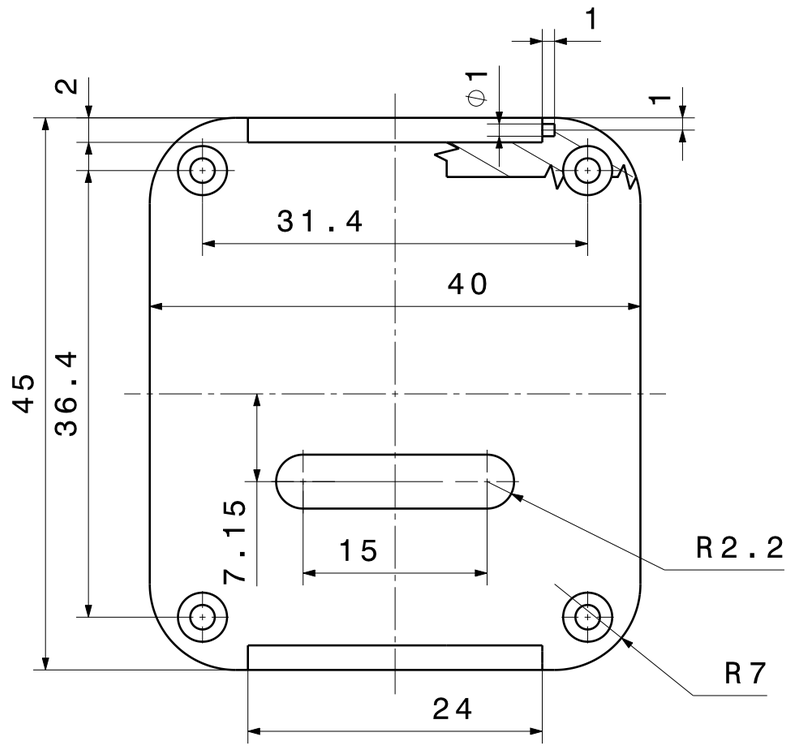

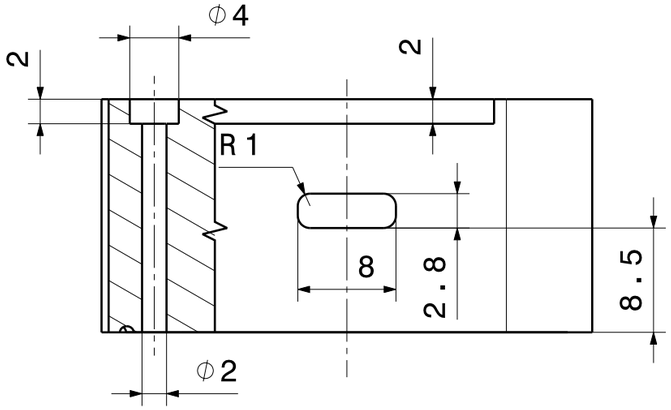

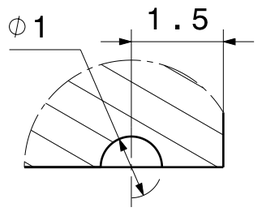

Detail B

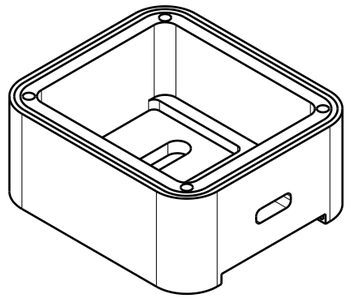

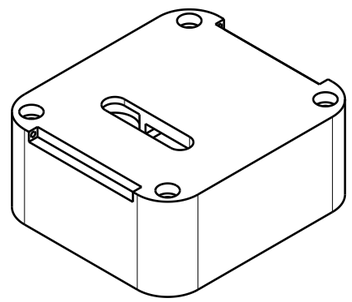

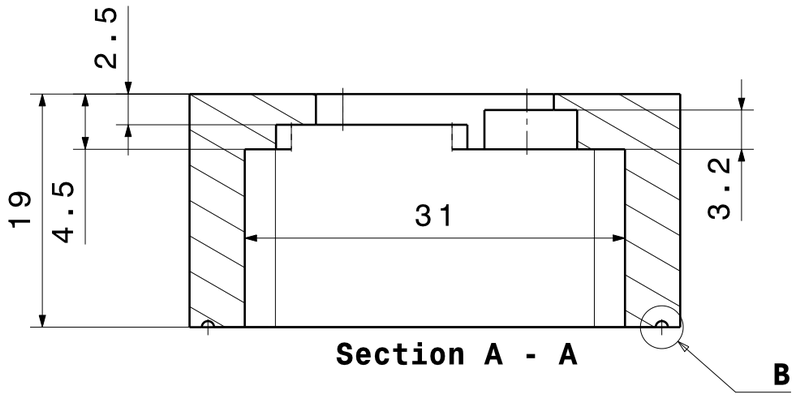

Section A - A

General tolerances ISO 2768-m

DESIGNED BY: Julian Priebe DATE: 27.05.2020	EM-BRACE	STATUS: Released	
CHECKED BY: XXX DATE: XXX		MATERIAL: ABS	
SIZE: A3	Guardians of Elderly		
SCALE: 2:1 / Detail Scale: 10:1	WEIGHT (kg): 0.02	Part: Bracelet body	SHEET: 1/1

This drawing is our property; it can't be reproduced or communicated without our written agreement.